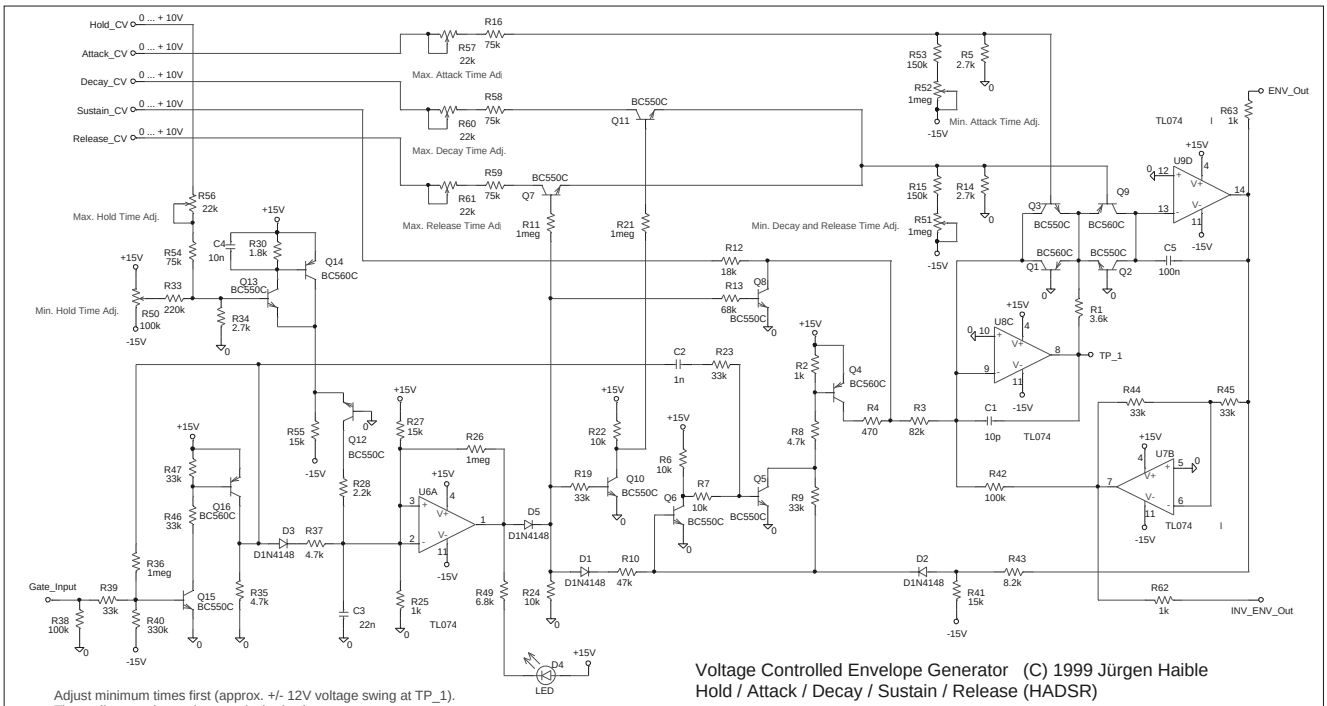

Adjust minimum times first (approx. +/- 12V voltage swing at TP_1).
Then adjust maximum times to desired value.

Voltage Controlled Envelope Generator (C) 1999 Jürgen Haible
Hold / Attack / Decay / Sustain / Release (HADSR)