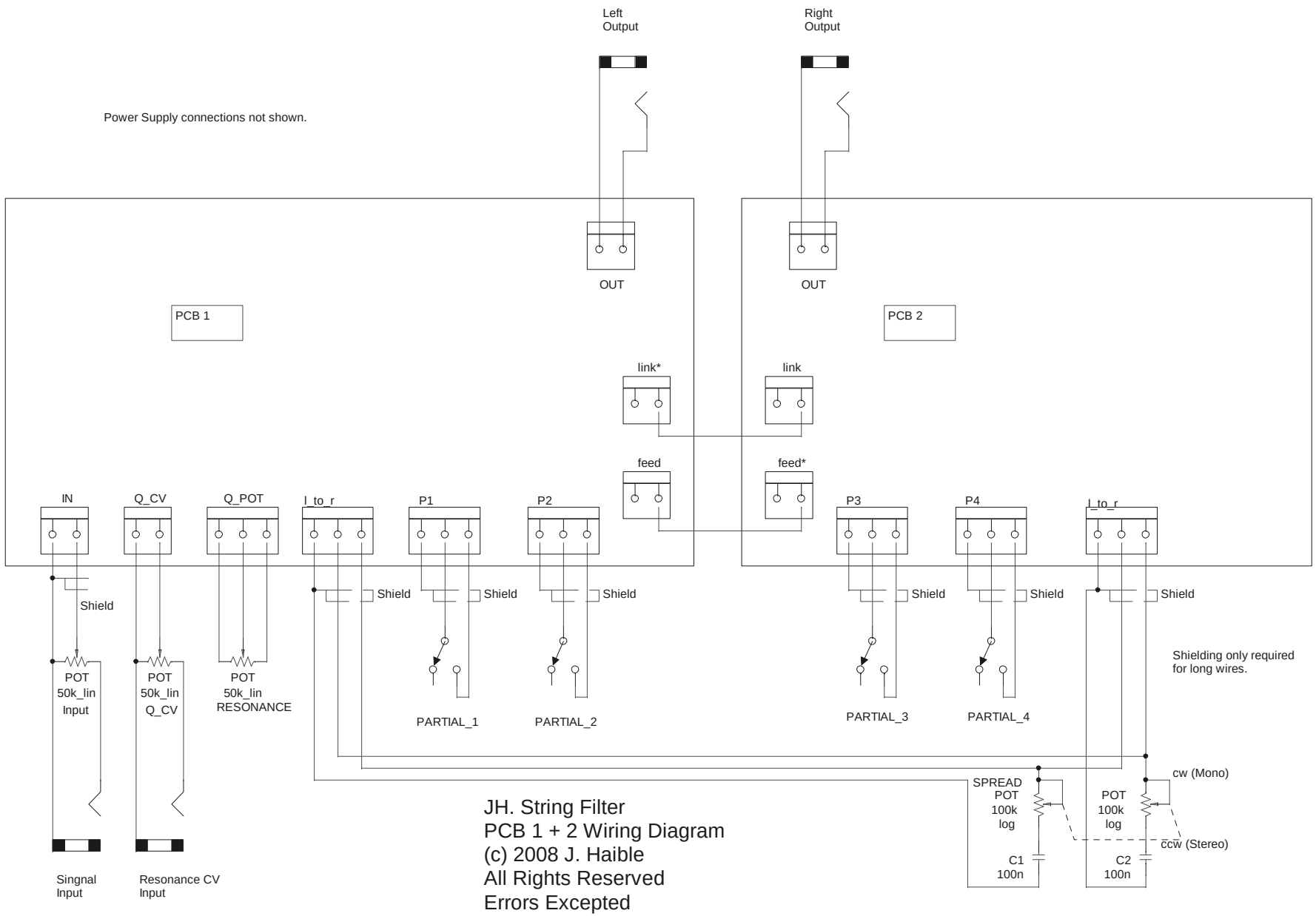

JH. String Filter
PCB 1 + 2 Wiring Diagram
(c) 2008 J. Haible
All Rights Reserved
Errors Excepted